Applications

- DC Motors – Stepping and Servos
- Solenoid Valves
- Relays
- Lamps and Signal Systems
- Input to On-Board Regulators
- Some Floppy Disc Drives

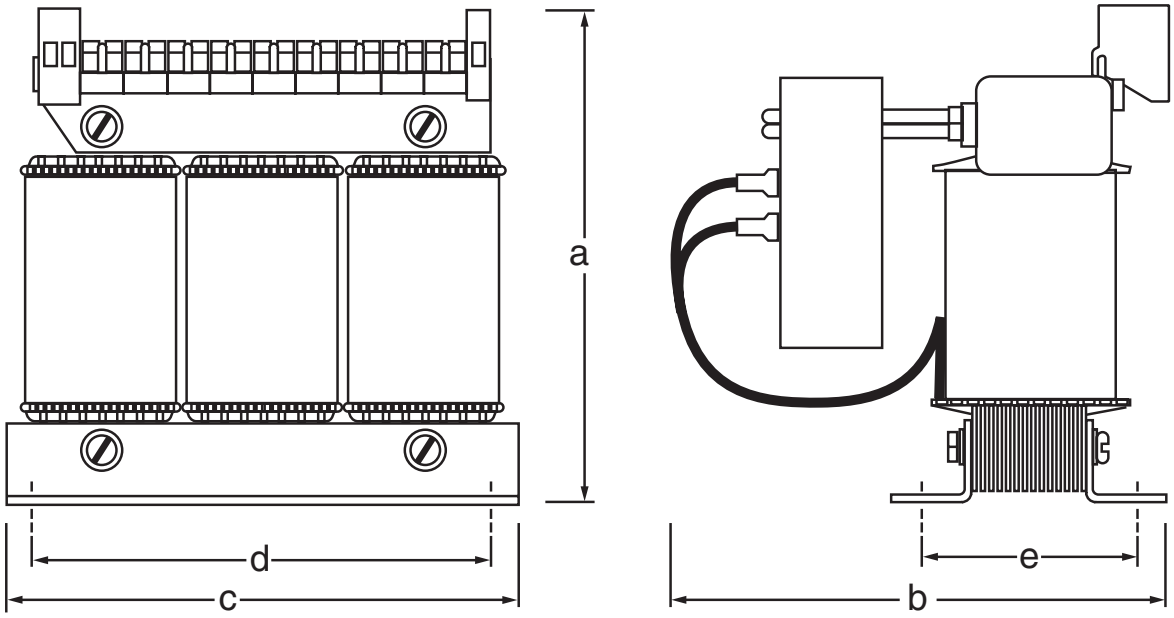

Selection Guide (partial)

Part No.	Case Size	Output	Approx. Dimensions (inches)					Weight (lbs.)
			a	b	c	d	e	
BVZ-24TA5	TA	24V @ 5A	7.00	6.00	8.00	5.00	2.37	11
BVZ-24TB10	TB	24V @ 10A	7.00	6.50	8.00	5.00	2.87	15.5
BVZ-24TC15	TC	24V @ 15A	8.37	6.00	9.00	6.75	2.75	18
BVZ-24TD20	TD	24V @ 20A	8.37	6.50	9.00	6.75	3.12	24
BVZ-24TE25	TE	24V @ 25A	8.37	6.50	9.00	6.75	3.12	26
BVZ-24TF30	TF	24V @ 30A	8.37	6.50	9.00	6.75	3.12	28

Unregulated DC Power Supplies Open Frame

Series: BVU

- Low cost unregulated DC power supplies
- Field selectable input taps 103/115/126/207/230/253 VAC for fine-tuning output to match actual field conditions
- Improved ripple - 3% maximum
- Fuse protected output
- Computer grade capacitors
- Floating output provides versatility for wiring
- Safety Agency Approvals:
  – UL 1950, Third Edition, File #E181899
  – CSA C22.2 No. 950, UL File #E181899
  – CE Marked

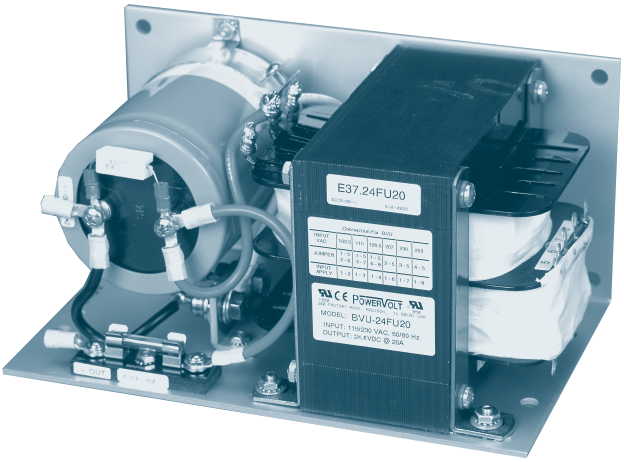

The BVU Series

The BVU Series of unregulated DC power supplies is the best low cost alternative, where moderate output variations and AC ripple are acceptable. The field selectable input taps allow fine tuning the output voltage to match actual field conditions. The DC output is fused for short circuit protection. For maximum versatility, the output is floating and may be referenced to another low voltage common ground or placed in series with other DC power supplies.

Applications

- DC motors - stepping and servos
- Solenoid valves
- Relays
- Lamps and signal systems
- Input to 3-terminal on-board regulators
- Some floppy disc drives

Tap (VAC)	Nominal (VAC)	High Line (VAC)
115,–10%	103.5	113.9
115,NOM	115	126.5
115,+10%	126.5	139.2
230,–10%	207	227.7
230,NOM	230	253.0
230,+10%	253	278.3

INPUT CONNECTIONS FOR BVU SERIES						
INPUT VAC	103.5	115	126.5	207	230	253
JUMPER	1 - 5 2 - 6	1 - 5 3 - 7	1 - 5 4 - 8	2 - 5	3 - 5	4 - 5
INPUT APPLY	1 - 2	1 - 3	1 - 4	1 - 6	1 - 7	1 - 8
FUSE AT	SEE UNIT ID LABEL					

Specifications

AC Input: 115/230VAC, 50/60Hz nominal.

Field selectable taps for +/–10%. High line tolerance on voltage is +10%

DC Output: Floating fixed output at full load ratings (see table). Transformer taps provided for approx. 10% output voltage adjustment.

Ripple: 3% r.m.s. maximum at nominal line and full rated load.

Operating Temperature: 0-50°C (Derate 2% per °C to 70°C)

Overload and Short Circuit Protection: Fused output.

It should be noted that the fuse is not necessarily direct in line with the output. In most models the fuse is prior to the output capacitor and in case of a short circuit, the capacitor energy will be discharged into the load even if the fuse has opened.

Schematic shows transformer taps provided for approx. +/–10% output voltage adjustment. Typical full load output voltage at 115VAC input using taps 1 and 3. For 10% higher output voltage use taps 1 and 2. For 10% lower output voltage use taps 1 and 4.

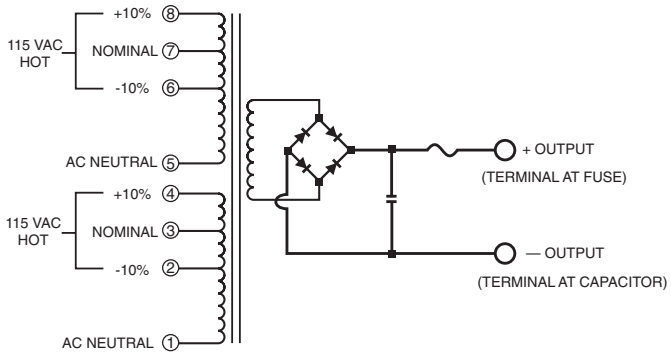

Part No.	Typical DC Output (@ nominal input and full load)
BVU-7AU1.8	7.5V @ 1.8A
BVU-12AU1.2	11V @ 1.2A
BVU-16AU0.9	17V @ 0.9A
BVU-20AU0.75	19.8V @ 0.75A
BVU-24AU0.6	25V @ 0.6A
BVU-48AU0.3	48V @ 0.3A
BVU-120AU0.12	113V @ 0.12A
BVU-250AU0.05	247V @ 0.05A
BVU-7BU3	7.5V @ 3A
BVU-12BU2.4	12V @ 2.4A
BVU-16BU1.8	16V @ 1.8A
BVU-20BU1.5	19.8V @ 1.5A
BVU-24BU1.2	26.5V @ 1.2A
BVU-48BU0.6	48V @ 0.6A
BVU-120BU0.25	120V @ 0.25A
BVU-250BU0.1	248V @ 0.1A
BVU-7CU6	7.5V @ 6A
BVU-12CU4.8	12V @ 4.8A
BVU-16CU3.6	16V @ 3.6A
BVU-20CU3	19.8V @ 3A
BVU-24CU2.4	26.5V @ 2.4A
BVU-48CU1.2	48V @ 1.2A
BVU-7DU10	8.5V @ 10A
BVU-12DU7	12.5V @ 7A
BVU-16DU6	17V @ 6A
BVU-20DU5	19.48V @ 5A
BVU-24DU3.5	25.5V @ 3.5A
BVU-48DU1.8	48V @ 1.8A
BVU-7EU20	9V @ 20A
BVU-12EU15	12.5V @ 15A
BVU-16EU12.5	16.5V @ 12.5A
BVU-20EU10	20V @ 10A
BVU-24EU7.5	27.5V @ 7.5A
BVU-45EU6	45V @ 6.0A
BVU-48EU4	47V @ 4A
BVU-72EU3	72V @ 3A
BVU-24FU20	24.6V @ 20A
BVU-45FU12	45V @ 12A
BVU-48FU10	48.4V @ 10A
BVU-75FU5	75V @ 5A
BVU-24GU30	24.6V @ 30A
BVU-48GU15	48V @ 15A
BVU-65GU15	65V @ 15A
BVU-75GU10	75V @ 10A

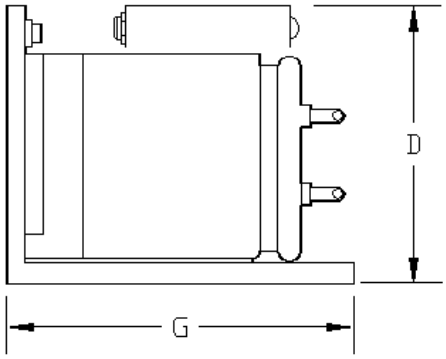

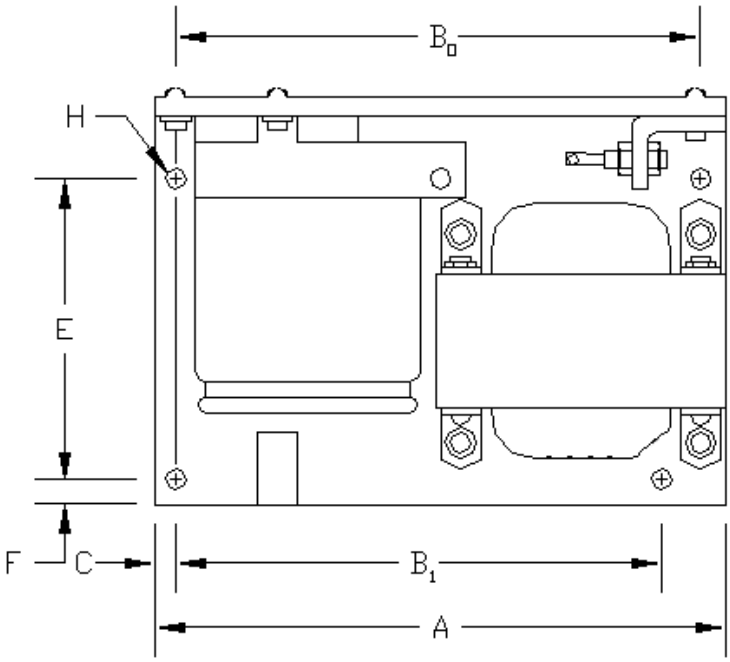

Dimensions										
Case Size	A	Bo	B1	C	D	E	F	G	H (dia)	Wt (lbs)
AU	4.62	4.00	NA	.31	2.09	1.60	.31	2.75	.20	1.7
BU	5.88	5.38	NA	.25	2.72	2.19	.31	3.25	.22	2.6
CU	6.25	5.65	5.15	.25	3.00	2.73	.35	3.71	.22	4.0
DU	7.12	6.42	5.87	.35	3.25	2.88	.30	4.00	.22	6.7
EU	8.10	7.50	6.90	.25	3.88	3.80	.30	5.00	.26	12.2
FU	9.00	8.24	NA	.35	4.62	2.50	1.56	5.62	.28	20.0
GU	9.50	8.50	NA	.50	5.56	6.62	.50	8.00	.28	28.5

Unregulated DC Power Supplies Enclosed Case

Series: UPV

- Low cost DC power; ideal for motors, relays, solenoids, lamps
- 115 VAC input standard; optional 230 VAC input
- Terminal strip for easy wiring
- Perforated cover for efficient cooling
- Optional mounting ears for installation without opening up cover
- Fused AC input
- 2-year warranty

Specifications

Input Voltage:
0-125 VAC (variac not included)
(optional 0-250 VAC), 50-400 Hz

Output Voltage:
See table

Output Current:
See table

Ripple:
See table

Load Regulation:
Nominal output voltage is based on 115 VAC (or 230 VAC) input at approximately 50% of rated current

Line Regulation:
With fixed load, output voltage change is proportional to the input voltage change

Output Voltage Adjustment:
An adjustable autotransformer (not included) can be used to adjust output voltage by varying AC input

Polarity:
Output is floating, either positive or negative terminal may be grounded or floated up to 300V above ground

Ambient Temperature:
-10 to +65 °C, No derating required

Storage Temperature:
-55 to +85 °C

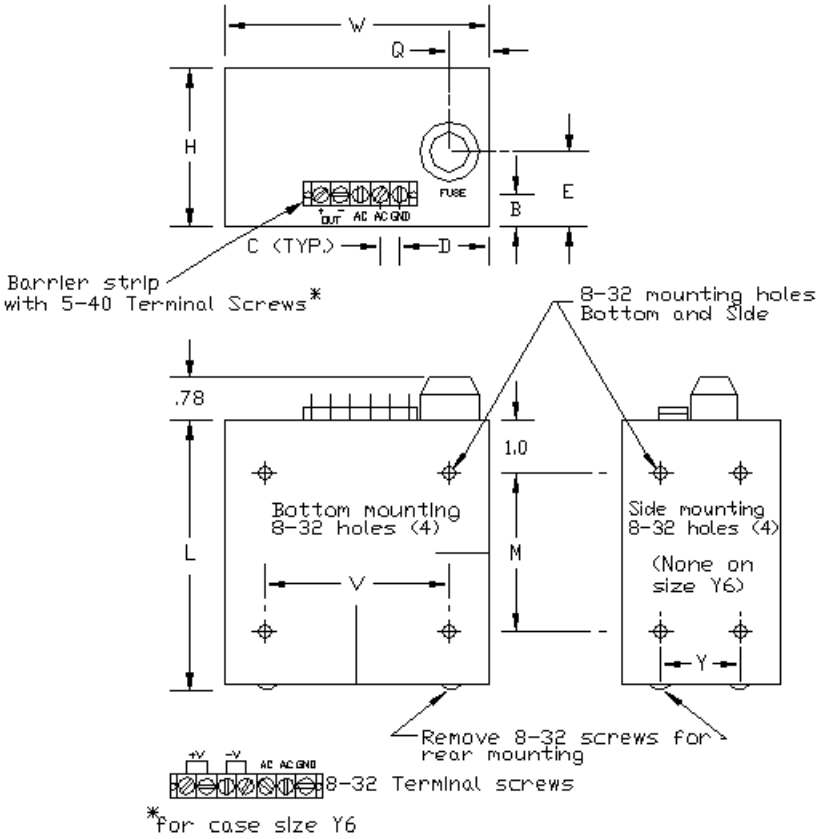

Dimensions												
Size	**L**	**W**	**H**	**M**	**V**	**Y**	**Q**	**E**	**B**	**D**	**C**	**Lbs.**
Y3	3.71	5.12	3.44	1.62	4.5	3	.56	1.37	.75	1.44	.375	3
Y5	5.09	5.12	3.44	3	4.5	3	.56	1.37	.75	1.44	.375	5
Y6	6.59	5.12	3.44	4	4.5	3	.56	1.37	.75	1.44	.375	8

Part No.	Case Size	Nominal Output (VDC)	Output (Amps)	Ripple (Vrms)	Output Voltage N/L to F/L (VDC)
UPV-7Y31	Y3	7	1.0	0.8	7.7 to 6.3
UPV-8Y30.4	Y3	8	0.4	0.4	8.8 to 7.2
UPV-9Y31	Y3	9	1.0	0.7	9.9 to 8.1
UPV-9Y610	Y6	9	10.0	2.3	11.5 to 7.5
			5.0	1.3	9.0
UPV-12Y31.5		12	1.5	2.5	14.9 to 10.9
UPV-12Y610	Y3	12	10.0	2.3	14.1 to 9.8
	Y6		5.0	1.3	11.5
UPV-16Y31	Y3	16	1.5	0.7	17.6 to 14.4
UPV-16Y610	Y6	16	10.0	2.3	18.8 to 14.2
			5.0	1.3	16.0
UPV-20Y610	Y6	20	10.0	2.4	23.7 to 18.3
			5.0	1.4	20.4
UPV-24Y31	Y3	24	1.0	1.7	26.4 to 21.6
UPV-24Y65	Y6	24	5.0	2.5	26.5 to 21.0
UPV-24Y610	Y6	24	10.0	2.4	26.8 to 21.4
UPV-35Y52	Y5	35	2.0	1.5	38.5 to 31.5
UPV-35Y65	Y6	35	5.0	3.3	38.0 to 30.0
UPV-40Y52	Y5	40	2.0	1.5	44.0 to 36.0
UPV-40Y65	Y6	40	5.0	3.3	45.0 to 37.0
UPV-48Y30.4	Y3	48	0.4	0.6	52.8 to 43.2
UPV-60Y51	Y5	60	1.0	2.8	65.3 to 53.0
UPV-60Y30.25	Y3	65	0.25	0.4	71.5 to 58.5
Ask for Specials. Custom Variations quoted and shipped promptly					

StepperPower™

The Power Supply for Stepping Motors

- Fully compatible with Pacific Scientific (and other) stepping motor driver series 5200, 5300, 5400, 6400
- Space saving compact modules provide mounting studs for motor drivers
- Integral motor and logic-power (where applicable)
- Models to drive one or two motors
- 120VAC or 240VAC models; input taps to match actual line voltages
- Custom units available
- Safety Agency Approvals BVU Series:
  – UL 1950, Third Edition, File #E181899
  – CSA, C22.2 No. 950, File #E181899
  – CE Marked

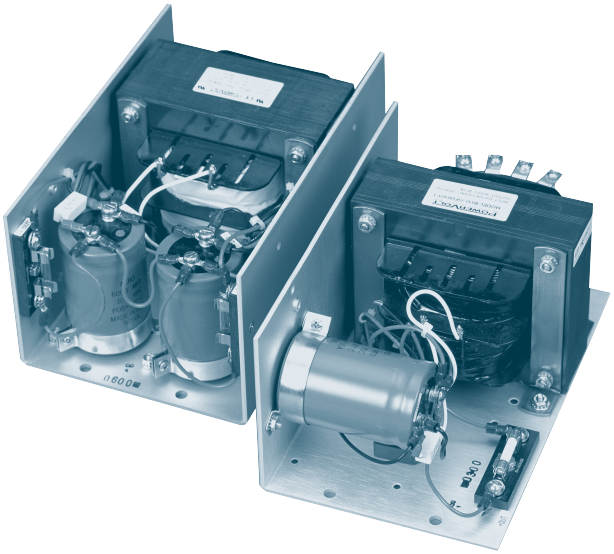

The StepperPower™

The StepperPower™, Series PV5000 and BVU6000, is an integral power supply module especially designed to operate stepping motors. Motor and logic power supplies are both incorporated in one package (when applicable). Models are available to drive one or two motors. The single driver models are assembled on an L-shaped chassis and threaded (#6-32) PEM nuts to mount motor driver. The dual driver models feature a U-shaped chassis wire threaded (#6-32) PEM nuts on both sides to mount two motor drivers. This makes it an integral space saving unit eliminating the need for installing and wiring different pieces.

Integral motor and logic power supplies

The motor and logic power supplies required to operate the stepping motors and associated control logic are both incorporated in one unit. This eliminates the need to install and wire two different power supplies to a separately mounted driver modules. The motor power is unregulated DC voltage; while the logic power is a fully regulated DC output that is maintained within tight regulation (±0.25V) over a large range of input AC voltage.

Models to drive one or two motors

The single motor drivers are commonly used. However, in a multi-axis control application, the dual driver models are a very cost effective and space saving alternative. In the single as well as dual driver models, the voltage and current ratings are provided to allow maximum motor torque without exceeding the safe operating voltage and current limits. When operating two drivers from one power supply, the effect of regenerative energy must be considered to assure safe operation of the drivers.

Space saving compact power module provides mounting studs for motor drivers

The StepperPower™ modules, series PV5000 and BVU6000, feature a transformer with high efficiency and excellent regulation that assures a compact physical size. They are assembled on space saving L- or U- shaped chassis. PEM nuts for mounting the driver modules are provided on one side of the L-bracket and on both sides of the U-chassis. Once the drivers are mounted on the power module, they become fully self-contained units without any need of external components. The outputs are lead wires that can be wired directly to the screw terminal connector available on the driver modules. This simplifies the installation and saves wiring time.

Input taps to match actual line voltages

As the motor power is unregulated, it tends to vary with the input line voltage. For example, if a high line is applied at the 120VAC tap, the motor output voltage may exceed the safe operating limit of the driver and cause damage. The taps are provided so that in high line locations, the output voltage can be kept within the safe operating limit by using the corresponding tap. The logic power is regulated and is not affected by the input line voltage over a wide range (95V AC to 135V AC when connected to 120V AC tap).

Custom designs to match other applications

PowerVolt will design any other custom units to match your application. Please call us for quotes.