General Purpose, Pulse and DC Transient Suppression

PME261 Series Metallized Impregnated Paper, 10.2 – 25.4 mm Lead Spacing, 400 – 1,000 VDC

The Capacitance Company
KEMET
CHARGED.

Overview

The PME261 Series is constructed of multilayer metallized paper, encapsulated and impregnated in self-extinguishing material meeting the requirements of UL 94 V–0.

Applications

For general use in DC and low frequency pulse applications.

Benefits

- Voltage range: 400 – 1,000 VDC; 220 – 500 VAC
- Capacitance range: 0.001 – 1 µF
- Lead spacing: 10.2 – 25.4 mm
- Capacitance tolerance: ±10%, ±20%, ±5% on request
- Climatic category: 40/70/56, IEC 60068–1
- Tape and reel packaging in accordance with IEC 60286–2
- RoHS Compliant and lead-free terminations
- Operating temperature range of -40˚C to +70˚C in AC applications
- Operating temperature range of -40˚C to +100˚C in DC applications
- Excellent self-healing properties. Ensures long life even when subjected to frequent over-voltages.
- Good resistance to ionization due to impregnated dielectric
- IEC Publication 166 Type 1
- High dV/dt capability
- Approved according to SE–MIL–QPL
- The capacitors meet the most stringent IEC humidity class, 56 days
- The impregnated paper ensures excellent stability giving outstanding reliability properties, especially in applications having continuous operation

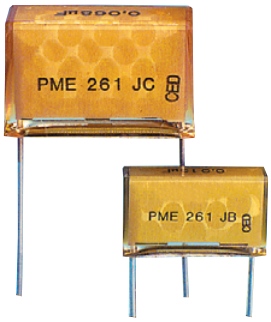

Legacy Part Number System

PME261	K	A	5100	K	R30
Series	Rated Voltage (VAC)	Lead Spacing (mm)	Capacitance Code (pF)	Capacitance Tolerance	Lead and Packaging Code
Metallized Paper	K = 220 E = 300 J = 500	A = 10.2 B = 15.2 C = 20.3 E = 25.4	Digits 2 – 4 indicate the first three digits of the capacitance value. First digit indicates the total number of digits in the capacitance value	J = ±5% K = ±10% M = ±20%	See Ordering Options Table

New KEMET Part Number System

P	561	H	E	103	K	220	A
Capacitor Class	Series	Lead Spacing (mm)	Size Code	Capacitance Code (pF)	Capacitance Tolerance	Rated Voltage (VAC)	Lead and Packaging Code
P = Paper	Metallized Paper General Purpose	H = 10.2 Q = 15.2 C = 20.3 E = 25.4	See Dimension Table	First two digits indicate the two most significant digits of the capacitance value in picofarads. The third digit is the number of following zeros.	J = ±5% K = ±10% M = ±20%	220 = 220 300 = 300 500 = 500	See Ordering Options Table

© KEMET Electronics Corporation • P.O. Box 5928 • Greenville, SC 29606 (864) 963-6300 • www.kemet.com

Ordering Options Table

Lead Spacing Nominal (mm)	Type of Leads and Packaging	Lead Length (mm)	KEMET Lead and Packaging Code	Legacy Lead and Packaging Code
10.2	**Standard Lead and Packaging Options**			
	Bulk (Bag) – Short Leads	6 +0/-1	C	R06
	Bulk (Bag) – Max Length Leads	17 +0/-1	A	R17
	Tape & Reel (Standard Reel)	H_0= 18.5 +/-0.5	L	R19T0
	Other Lead and Packaging Options			
	Tape & Reel (Large Reel)	H_0= 18.5 +/-0.5	P	R19T1
Native 10.2 formed to 7.5	Ammo Pack	H_0= 16.5 +/-0.5	LAF3	R30XA
15.2	**Standard Lead and Packaging Options**			
	Bulk (Bag) – Short Leads	6 +0/-1	C	R06
	Bulk (Bag) – Max Length Leads	30 +5/-0	A	R30
	Tape & Reel (Standard Reel)	H_0= 18.5 +/-0.5	L	R19T0
	Other Lead and Packaging Options			
	Tape & Reel (Large Reel)	H_0= 18.5 +/-0.5	P	R19T1
20.3	**Standard Lead and Packaging Options**			
	Bulk (Tray) – Short Leads	6 +0/-1	C	R06
	Bulk (Bag) – Max Length Leads	30 +5/-0	A	R30
	Tape & Reel (Standard Reel)	H_0= 18.5 +/-0.5	L	R19T0
	Other Lead and Packaging Options			
	Tape & Reel (Large Reel)	H_0= 18.5 +/-0.5	P	R19T1
25.4	**Standard Lead and Packaging Options**			
	Bulk (Tray) – Short Leads	6 +0/-1	C	R06
	Bulk (Bag) – Max Length Leads	30 +5/-0	A	R30

Dimensions – Millimeters

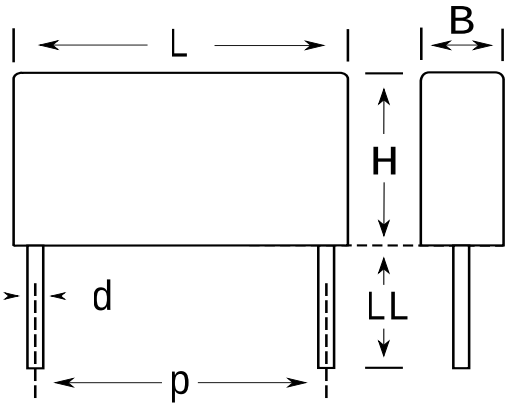

Size Code	p		B		H		L		d	
	Nominal	Tolerance	Nominal	Tolerance	Nominal	Tolerance	Nominal	Tolerance	Nominal	Tolerance
HE	10.2	+/-0.4	3.9	Maximum	7.5	Maximum	13.5	Maximum	0.6	+/-0.05
HL	10.2	+/-0.4	5.1	Maximum	10.5	Maximum	13.5	Maximum	0.6	+/-0.05
QE	15.2	+/-0.4	5.2	Maximum	10.5	Maximum	18.5	Maximum	0.8	+/-0.05
QM	15.2	+/-0.4	7.3	Maximum	13.0	Maximum	18.5	Maximum	0.8	+/-0.05
QP	15.2	+/-0.4	7.8	Maximum	13.5	Maximum	18.5	Maximum	0.8	+/-0.05
CE	20.3	+/-0.4	7.6	Maximum	14.0	Maximum	24.0	Maximum	0.8	+/-0.05
CG	20.3	+/-0.4	8.4	Maximum	14.0	Maximum	24.0	Maximum	0.8	+/-0.05
CJ	20.3	+/-0.4	9.0	Maximum	15.0	Maximum	24.0	Maximum	0.8	+/-0.05
CP	20.3	+/-0.4	11.3	Maximum	16.5	Maximum	24.0	Maximum	0.8	+/-0.05
EH	25.4	+/-0.4	10.6	Maximum	17.3	Maximum	30.5	Maximum	1	+/-0.05
EL	25.4	+/-0.4	15.3	Maximum	22.0	Maximum	30.5	Maximum	1	+/-0.05
Note: See Ordering Options Table for lead length (LL) options.										

Performance Characteristics

Rated Voltage V_R (VDC)	400	630	1000
Rated Voltage V_R (VAC)	220	300	500
Capacitance Range (µF)	0.0082 – 1.0	0.001 – 0.15	0.001 – 0.1
Capacitance Tolerance	±10%, ±20%, ±5% on request		
Temperature Range	-40 to +70°C		
	-40 to +100°C		
Climatic Category	40/070/56		
Dissipation Factor tanδ	Maximum Values at +23°C		
	1 kHz		1.3%
Insulation Resistance	Measured at +20°C, According to IEC 60384–2		
	Minimum Values Between Terminals		
	C ≤ 0.33 µF		≥ 12,000 MΩ
	C > 0.33 µF		≥ 4,000 MΩ • µF
	PME261 K measured at 100 VDC after 60 seconds, +23°C		
	PME261 E and J measured at 500 VDC after 60 seconds, +23°C		

Environmental Test Data

Test	IEC Publication	Procedure
Vibration	IEC 60068–2–6 Test Fc	3 directions at 2 hours each 10 – 55 Hz at 0.75 mm or 98 m/s^2
Bump	IEC 60068–2–29 Test Eb	4,000 bumps at 390 m/s^2
Solderability	IEC 60068–2–20 Test Ta	Solder globule method Wetting time for d ≤ 0.8 < 1 second for d > 0.8 < 1.5 seconds
Passive Flammability	IEC 60695–2–2	
Damp Heat Steady State	IEC 60068-2-3 Test Ca	+40°C and 90 – 95% RH, 56 days

Environmental Compliance

All KEMET MKTI capacitors are RoHS Compliant.

RoHS Compliant

Table 1 – Ratings & Part Number Reference

Capacitance Value (µF)	Max Dimensions in mm			Lead Spacing (p)	dV/dt (V/µs)	New Kemet Part Number	Legacy Part Number
	B	H	L				
0.0082	3.9	7.5	13.5	10.2	2000	P561HE822(1)220(2)	PME261KA4820(1)(2)
0.010	3.9	7.5	13.5	10.2	2000	P561HE103(1)220(2)	PME261KA5100(1)(2)
0.015	5.1	10.5	13.5	10.2	2000	P561HL153(1)220(2)	PME261KA5150(1)(2)
0.022	5.1	10.5	13.5	10.2	2000	P561HL223(1)220(2)	PME261KA5220(1)(2)
0.033	5.2	10.5	18.5	15.2	1600	P561QE333(1)220(2)	PME261KB5330(1)(2)
0.047	5.2	10.5	18.5	15.2	1300	P561QE473(1)220(2)	PME261KB5470(1)(2)
0.068	7.3	13.0	18.5	15.2	1100	P561QM683(1)220(2)	PME261KB5680(1)(2)
0.1	7.3	13.0	18.5	15.2	850	P561QM104(1)220(2)	PME261KB6100(1)(2)
0.15	7.6	14.0	24.0	20.3	700	P561CE154(1)220(2)	PME261KC6150(1)(2)
0.22	8.4	14.0	24.0	20.3	560	P561CG224(1)220(2)	PME261KC6220(1)(2)
0.33	11.3	16.5	24.0	20.3	430	P561CP334(1)220(2)	PME261KC6330(1)(2)
0.47	10.6	17.3	30.5	25.4	370	P561EH474(1)220(2)	PME261KE6470(1)(2)
0.68	15.3	22.0	30.5	25.4	300	P561EL684(1)220(2)	PME261KE6680(1)(2)
1	15.3	22.0	30.5	25.4	220	P561EL105(1)220(2)	PME261KE7100(1)(2)
0.001	3.9	7.5	13.5	10.2	2000	P561HE102(1)300(2)	PME261EA4100(1)(2)
0.0015	3.9	7.5	13.5	10.2	2000	P561HE152(1)300(2)	PME261EA4150(1)(2)
0.0022	3.9	7.5	13.5	10.2	2000	P561HE222(1)300(2)	PME261EA4220(1)(2)
0.0033	3.9	7.5	13.5	10.2	2000	P561HE332(1)300(2)	PME261EA4330(1)(2)
0.0047	3.9	7.5	13.5	10.2	2000	P561HE472(1)300(2)	PME261EA4470(1)(2)
0.0068	3.9	7.5	13.5	10.2	2000	P561HE682(1)300(2)	PME261EA4680(1)(2)
0.01	5.1	10.5	13.5	10.2	2000	P561HL103(1)300(2)	PME261EA5100(1)(2)
0.015	5.1	10.5	13.5	10.2	2000	P561HL153(1)300(2)	PME261EA5150(1)(2)
0.022	5.2	10.5	18.5	15.2	2000	P561QE223(1)300(2)	PME261EB5220(1)(2)
0.033	5.2	10.5	18.5	15.2	2000	P561QE333(1)300(2)	PME261EB5330(1)(2)
0.047	7.3	13.0	18.5	15.2	1600	P561QM473(1)300(2)	PME261EB5470(1)(2)
0.068	7.3	13.0	18.5	15.2	1200	P561QM683(1)300(2)	PME261EB5680(1)(2)
0.1	7.6	14.0	24.0	20.3	900	P561CE104(1)300(2)	PME261EC6100(1)(2)
0.15	9.0	15.0	24.0	20.3	650	P561CJ154(1)300(2)	PME261EC6150(1)(2)
0.001	3.9	7.5	13.5	10.2	2000	P561HE102(1)500(2)	PME261JA4100(1)(2)
0.0015	3.9	7.5	13.5	10.2	2000	P561HE152(1)500(2)	PME261JA4150(1)(2)
0.0022	3.9	7.5	13.5	10.2	2000	P561HE222(1)500(2)	PME261JA4220(1)(2)
0.0033	3.9	7.5	13.5	10.2	2000	P561HE332(1)500(2)	PME261JA4330(1)(2)
0.0047	5.1	10.5	13.5	10.2	2000	P561HL472(1)500(2)	PME261JA4470(1)(2)
0.0068	5.1	10.5	13.5	10.2	2000	P561HL682(1)500(2)	PME261JA4680(1)(2)
0.01	5.2	10.5	18.5	15.2	2000	P561QE103(1)500(2)	PME261JB5100(1)(2)
0.015	5.2	10.5	18.5	15.2	2000	P561QE153(1)500(2)	PME261JB5150(1)(2)
0.022	7.3	13.0	18.5	15.2	2000	P561QM223(1)500(2)	PME261JB5220(1)(2)
0.033	7.8	13.5	18.5	15.2	2000	P561QP333(1)500(2)	PME261JB5330(1)(2)
0.047	7.6	14.0	24.0	20.3	2000	P561CE473(1)500(2)	PME261JC5470(1)(2)
0.068	9.0	15.0	24.0	20.3	1400	P561CJ683(1)500(2)	PME261JC5680(1)(2)
0.1	11.3	16.5	24.0	20.3	950	P561CP104(1)500(2)	PME261JC6100(1)(2)
Capacitance Value (µF)	**B (mm)**	**H (mm)**	**L (mm)**	**Lead Spacing (p)**	**dV/dt (V/µs)**	**New KEMET Part Number**	**Legacy Part Number**

(1) K = ±10%, M = ±20%, J = ±5% on request.

(2) Insert lead and packaging code. See Ordering Options Table for available options.

Roll Over for Order Info.

Soldering Process

The implementation of the RoHS Directive has required the selection SnAuCu (SAC) alloys or SnCu alloys as primary solder. This has increased the liquidus temperature from that of 183°C for SnPb eutectic alloy to 217°C – 221°C for the new alloys. As a result, the heat stress to components, even in wave soldering, has increased considerably due to higher pre-heat and wave temperatures. Wave soldering can be destructive especially for mechanically small polypropylene capacitors and great care must be taken during soldering. The solder profiles from KEMET are highly recommended. You may also refer to the wave soldering curve from IEC Publication 61760–1 Edition 2. Please consult KEMET with any questions.

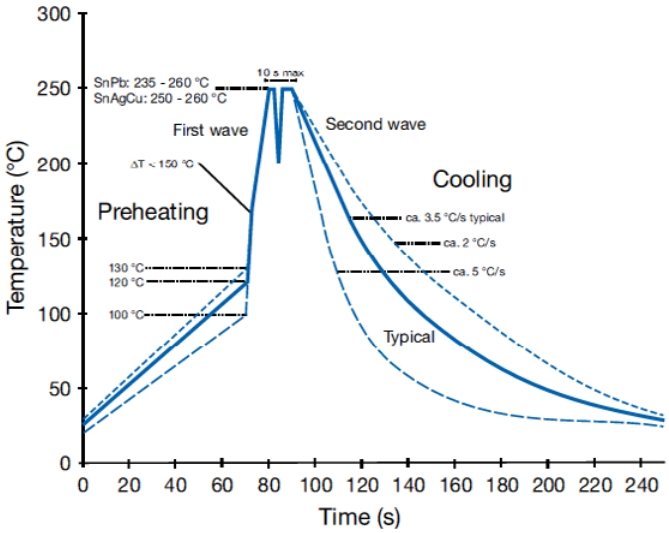

Marking

- KEMET's logo
- Series
- Capacitance
- Rated voltage AC/DC
- MP for metallized paper
- Manufacturing date code
- IEC climatic category
- Manufacturing plant

Packaging Quantities

Lead Spacing (mm)	Thickness (mm)	Height (mm)	Length (mm)	Bulk Short Leads	Bulk Long Leads	Standard Reel ø 360 mm	Large Reel ø 500 mm	Ammo Formed
10.2	3.9	7.5	13.5	2000	1000	700	1400	800
	4.1	8.2	13.5	2000	1000	600		780
	5.1	10.5	13.5	1600	800	600	1200	630
15.2	5.5	12.5	18	1000	500	600		
	6.5	12.5	18	600	400	400		
	7.5	14.5	18	600	400	400		
	8.5	16	18	400	250	400		
	5.2	10.5	18.5	1000	500	600		
	5.5	11	18.5	1000	500	500		
	6	12.5	18.5	600	400	400		
	7.3	13	18.5	600	400	400	800	
	7.8	13.5	18.5	600	400	400		
	8.5	14.3	18.5	500	300	350		
20.3	7.6	14	24	1500	250	250	500	
	8.4	14	24	1200	200	250	500	
	9	15	24	1500	200	250		
	11.3	16.5	24	1000	150	180	400	
25.4	10.6	16.1	30.5	1000	150			
	10.5	17.3	30.5	1000	100			
	12.1	19	30.5	800	100			
	15.3	22	30.5	600	75			

Lead Taping & Packaging (IEC 60286–2)

Lead Spacing 10.2 – 15.2 mm

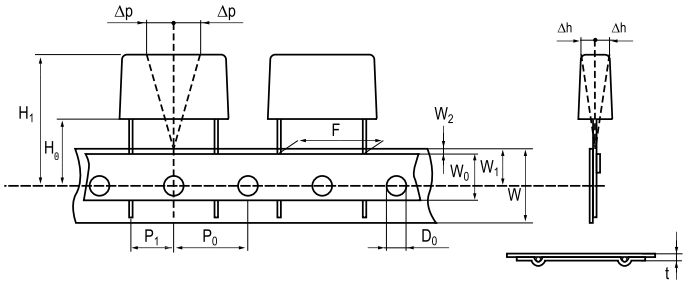

Lead Spacing 20.3 – 22.5 mm

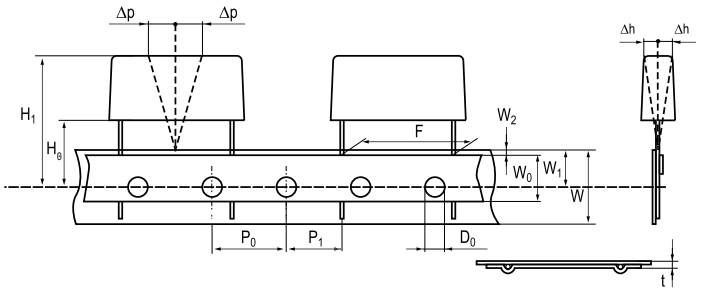

Formed Leads from 10.2 to 7.5 mm

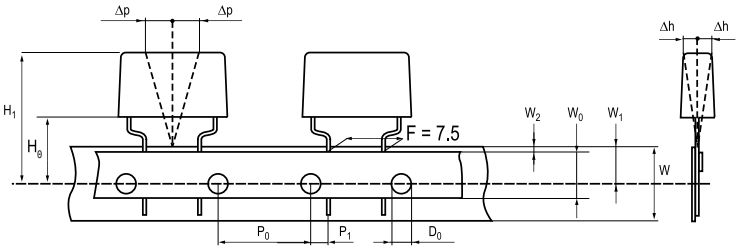

Taping Specification

Dimensions in mm								Standard IEC 60286–2
Lead spacing	+6/-0.1	F	Formed 7.5	10.2	15.2	20.3	22.5	F
Carrier tape width	+/-0.5	W	18	18	18	18	18	$18^{+1/-0.5}$
Hold-down tape width	+/-0.3	W_0	9	12	12	12	12	
Position of sprocket hole	+/-0.5	W_1	9	9	9	9	9	$9^{+0.75/-0.5}$
Distance between tapes	Maximum	W_2	3	3	3	3	3	3
Sprocket hole diameter	+/-0.2	D_0	4	4	4	4	4	4
Feed hole lead spacing	+/-0.3	P_0 (1)	12.7(4)	12.7	12.7	12.7	12.7	12.7
Distance lead – feed hole	+/-0.7	P_1	3.75	7.6	5.1	8.9	5.3	P^1
Deviation tape – plane	Maximum	Δp	1.3	1.3	1.3	1.3	1.3	1.3
Lateral deviation	Maximum	Δh	2	2	2	2	2	2
Total thickness	+/-0.2	t	0.7	0.7	0.7	0.7	0.9^{MAX}	0.9^{MAX}
Sprocket hole/cap body	Nominal	H_0 (2)	$18^{+2/-0}$	$18^{+2/-0}$	$18^{+2/-0}$	$18^{+2/-0}$	$18.5^{+/-0.5}$	$18^{+2/-0}$
Sprocket hole/top of cap body	Maximum	H_1 (3)	35	35	35	35	58	58^{MAX}

(1) Maximum cumulative feed hole error, 1 mm per 20 parts.
(2) 16.5 mm available on request.
(3) Depending on case size.
(4) 15 mm available on request.

Lead Taping & Packaging (IEC 60286–2) cont'd

Ammo Specifications

Series	Dimensions (mm)		
	H	W	T
R4x, R4x+R, R7x, RSB	360	340	59
F5A, F5B, F5D			
F6xx, F8xx			
PHExxx, PMExxx, PMRxxx	330	330	50

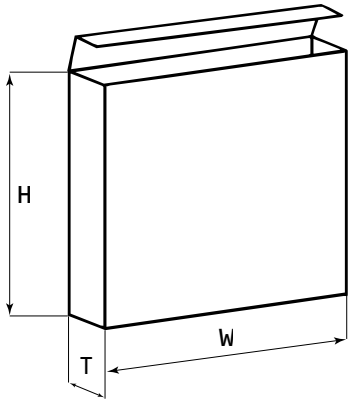

Reel Specifications

Series	Dimensions (mm)		
	D	H	W
R4x, R4x+R, R7x, RSB	355 500	30 25	55 (Max)
F5A, F5B, F5D			
F6xx, F8xx			
PHExxx, PMExxx, PMRxxx	360 500	30	46 (Max)

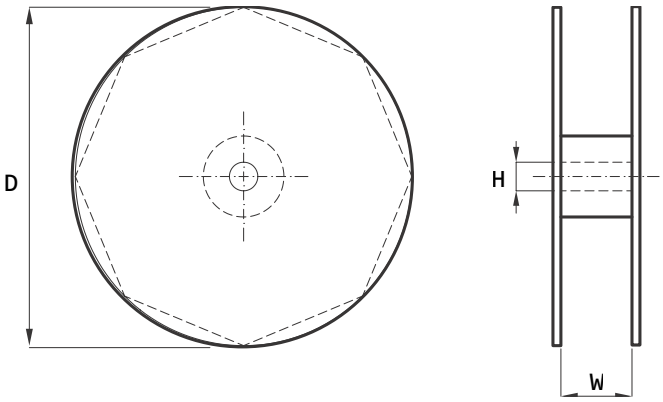

Manufacturing Date Code (IEC–60062)

Y = Year, Z = Month			
Year	Code	Month	Code
2000	M	January	1
2001	N	February	2
2002	P	March	3
2003	R	April	4
2004	S	May	5
2005	T	June	6
2006	U	July	7
2007	V	August	8
2008	W	September	9
2009	X	October	O
2010	A	November	N
2011	B	December	D
2012	C		
2013	D		
2014	E		
2015	F		
2016	H		
2017	J		
2018	K		
2019	L		
2020	M		

KEMET Corporation World Headquarters

2835 KEMET Way
Simpsonville, SC 29681

Mailing Address:
P.O. Box 5928
Greenville, SC 29606

www.kemet.com
Tel: 864-963-6300
Fax: 864-963-6521

Corporate Offices
Fort Lauderdale, FL
Tel: 954-766-2800

North America

Southeast
Lake Mary, FL
Tel: 407-855-8886

Northeast
Wilmington, MA
Tel: 978-658-1663

Central
Novi, MI
Tel: 248-994-1030

West
Milpitas, CA
Tel: 408-433-9950

Mexico
Guadalajara, Jalisco
Tel: 52-33-3123-2141

Europe

Southern Europe
Paris, France
Tel: 33-1-4646-1006

Sasso Marconi, Italy
Tel: 39-051-939111

Central Europe
Landsberg, Germany
Tel: 49-8191-3350800

Kamen, Germany
Tel: 49-2307-438110

Northern Europe
Bishop's Stortford, United Kingdom
Tel: 44-1279-460122

Espoo, Finland
Tel: 358-9-5406-5000

Asia

Northeast Asia
Hong Kong
Tel: 852-2305-1168

Shenzhen, China
Tel: 86-755-2518-1306

Beijing, China
Tel: 86-10-5829-1711

Shanghai, China
Tel: 86-21-6447-0707

Taipei, Taiwan
Tel: 886-2-27528585

Southeast Asia
Singapore
Tel: 65-6586-1900

Penang, Malaysia
Tel: 60-4-6430200

Bangalore, India
Tel: 91-806-53-76817

Note: KEMET reserves the right to modify minor details of internal and external construction at any time in the interest of product improvement. KEMET does not assume any responsibility for infringement that might result from the use of KEMET Capacitors in potential circuit designs. KEMET is a registered trademark of KEMET Electronics Corporation.

Other KEMET Resources

Tools	
Resource	Location
Configure A Part: CapEdge	http://capacitoredge.kemet.com
SPICE & FIT Software	http://www.kemet.com/spice
Search Our FAQs: KnowledgeEdge	http://www.kemet.com/keask
Electrolytic LifeCalculator	http://www.kemet.com:8080/elc

Product Information	
Resource	Location
Products	http://www.kemet.com/products
Technical Resources (Including Soldering Techniques)	http://www.kemet.com/technicalpapers
RoHS Statement	http://www.kemet.com/rohs
Quality Documents	http://www.kemet.com/qualitydocuments

Product Request	
Resource	Location
Sample Request	http://www.kemet.com/sample
Engineering Kit Request	http://www.kemet.com/kits

Contact	
Resource	Location
Website	www.kemet.com
Contact Us	http://www.kemet.com/contact
Investor Relations	http://www.kemet.com/ir
Call Us	1-877-MyKEMET
Twitter	http://twitter.com/kemetcapacitors

Disclaimer

All product specifications, statements, information and data (collectively, the "Information") in this datasheet are subject to change. The customer is responsible for checking and verifying the extent to which the Information contained in this publication is applicable to an order at the time the order is placed.

All Information given herein is believed to be accurate and reliable, but it is presented without guarantee, warranty, or responsibility of any kind, expressed or implied.

Statements of suitability for certain applications are based on KEMET Electronics Corporation's ("KEMET") knowledge of typical operating conditions for such applications, but are not intended to constitute – and KEMET specifically disclaims – any warranty concerning suitability for a specific customer application or use. The Information is intended for use only by customers who have the requisite experience and capability to determine the correct products for their application. Any technical advice inferred from this Information or otherwise provided by KEMET with reference to the use of KEMET's products is given gratis, and KEMET assumes no obligation or liability for the advice given or results obtained.

Although KEMET designs and manufactures its products to the most stringent quality and safety standards, given the current state of the art, isolated component failures may still occur. Accordingly, customer applications which require a high degree of reliability or safety should employ suitable designs or other safeguards (such as installation of protective circuitry or redundancies) in order to ensure that the failure of an electrical component does not result in a risk of personal injury or property damage.

Although all product–related warnings, cautions and notes must be observed, the customer should not assume that all safety measures are indicted or that other measures may not be required.

Digitally signed by Jeannette Calvo
DN: c=US, st=FL, l=Fort Lauderdale, o=KEMET Corp., ou=Marketing Communications, cn=Jeannette Calvo, email=jeannettecalvo@kemet.com
Date: 2013.04.05 16:03:19 -04'00'